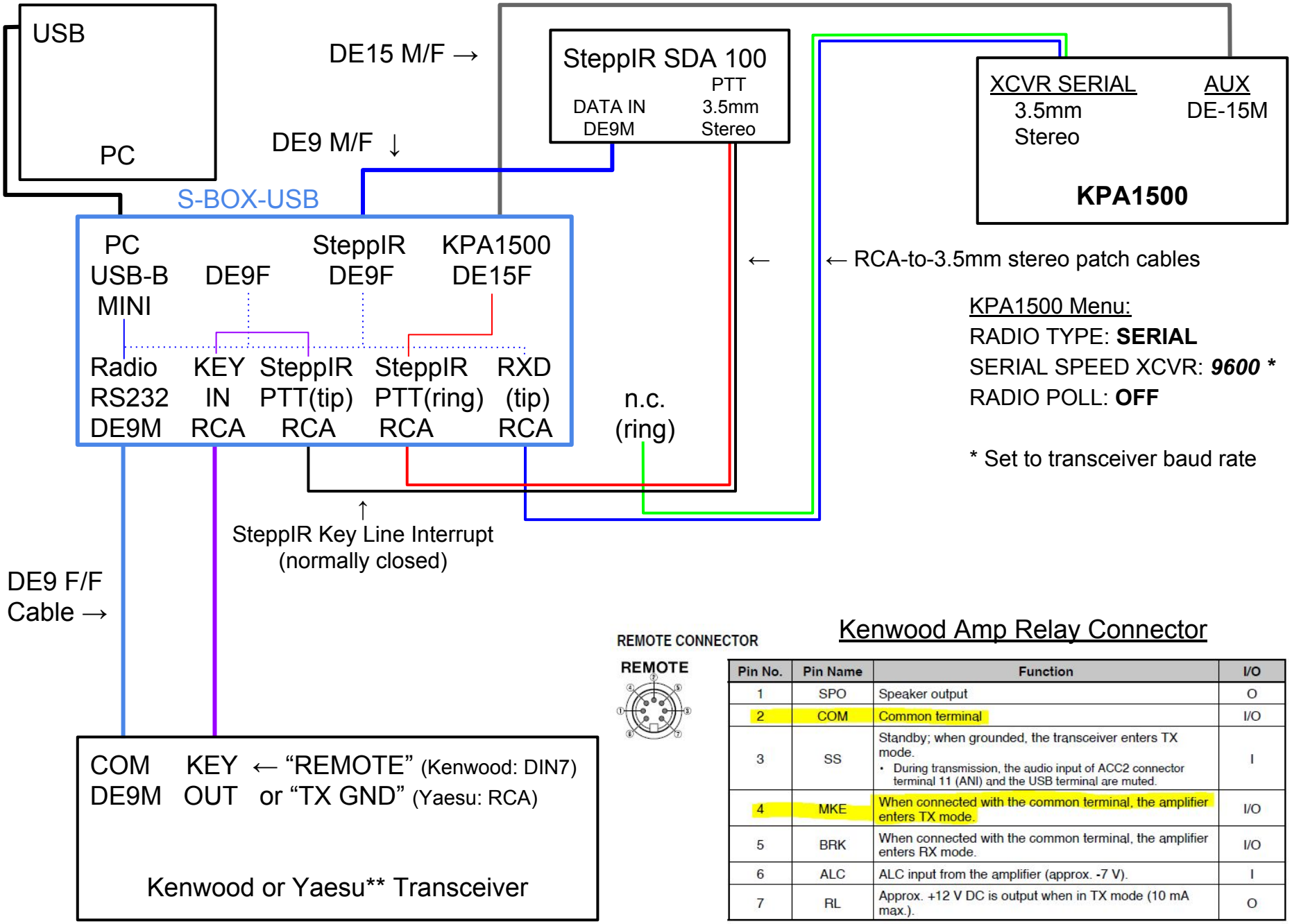

REMOTE CONNECTOR

REMOTE

Kenwood Amp Relay Connector

Pin No.	Pin Name	Function	I/O
1	SPO	Speaker output	O
2	COM	Common terminal	I/O
3	SS	Standby; when grounded, the transceiver enters TX mode. • During transmission, the audio input of ACC2 connector terminal 11 (ANI) and the USB terminal are muted.	I
4	MKE	When connected with the common terminal, the amplifier enters TX mode.	I/O
5	BRK	When connected with the common terminal, the amplifier enters RX mode.	I/O
6	ALC	ALC input from the amplifier (approx. -7 V).	I
7	RL	Approx. +12 V DC is output when in TX mode (10 mA max.).	O

** Recent Yaesu models that use Kenwood-style CAT commands

© 2018 N6TV