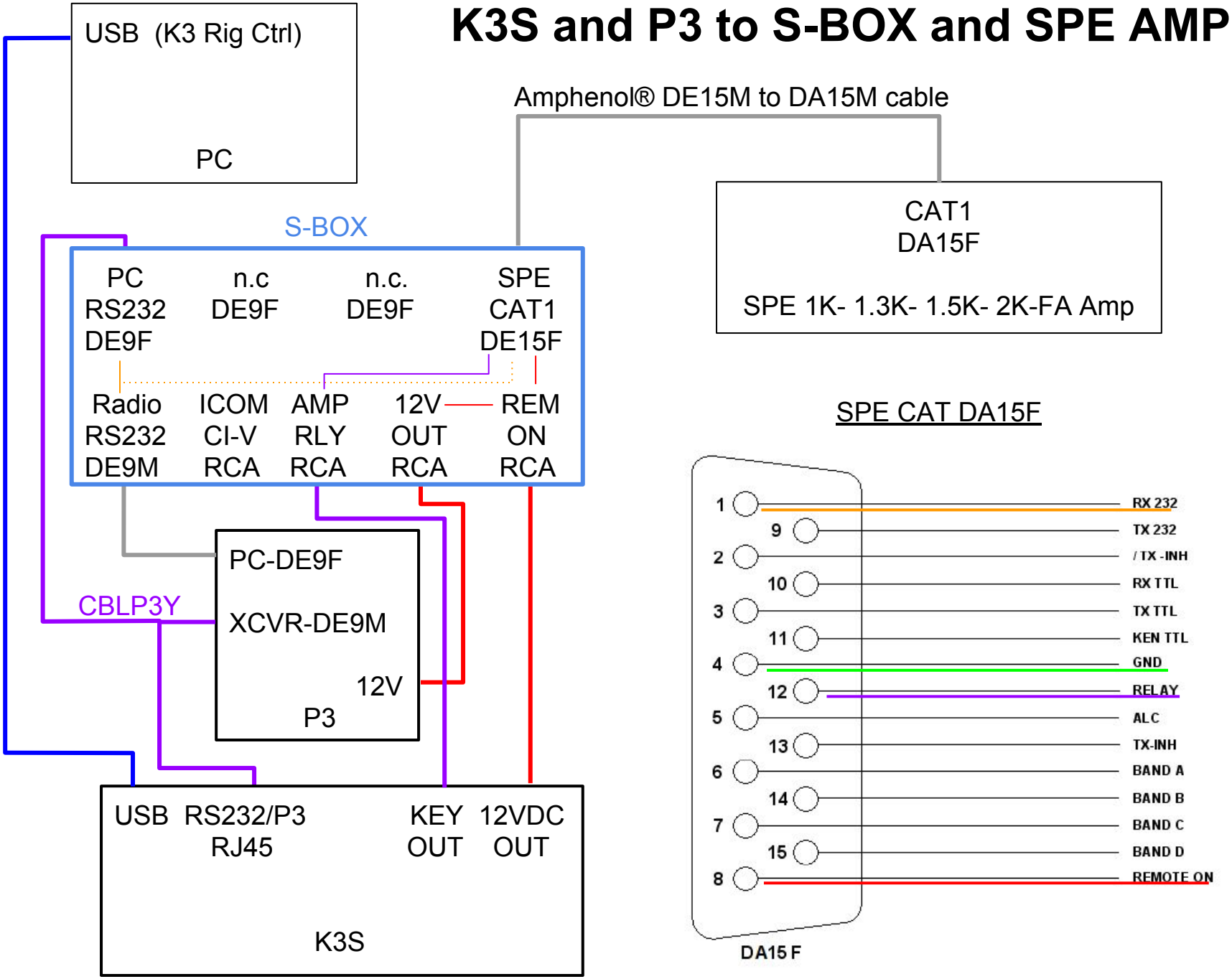K3S and P3 to S-BOX and SPE AMP