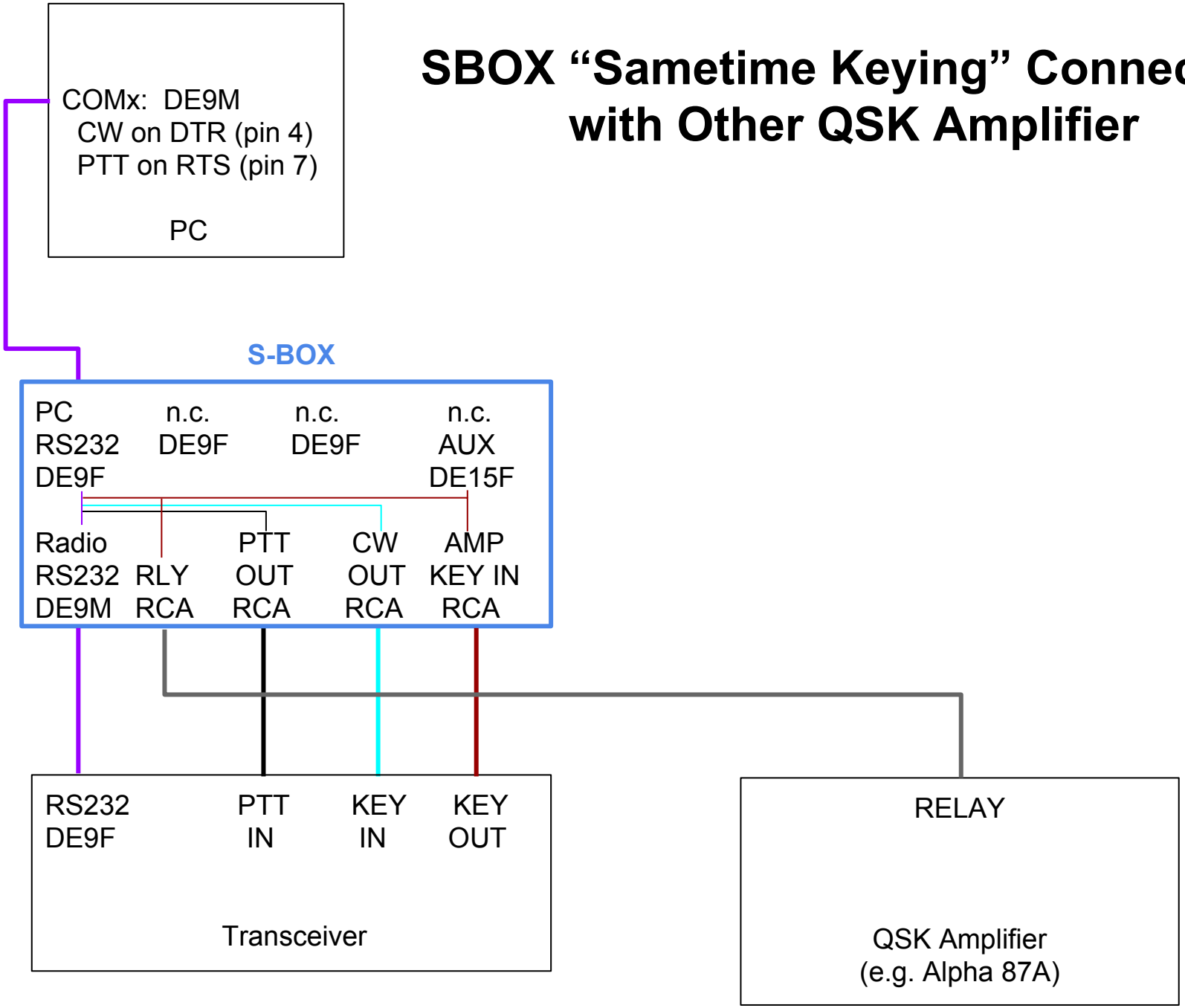SBOX “Sametime Keying” Connection with Other QSK Amplifier