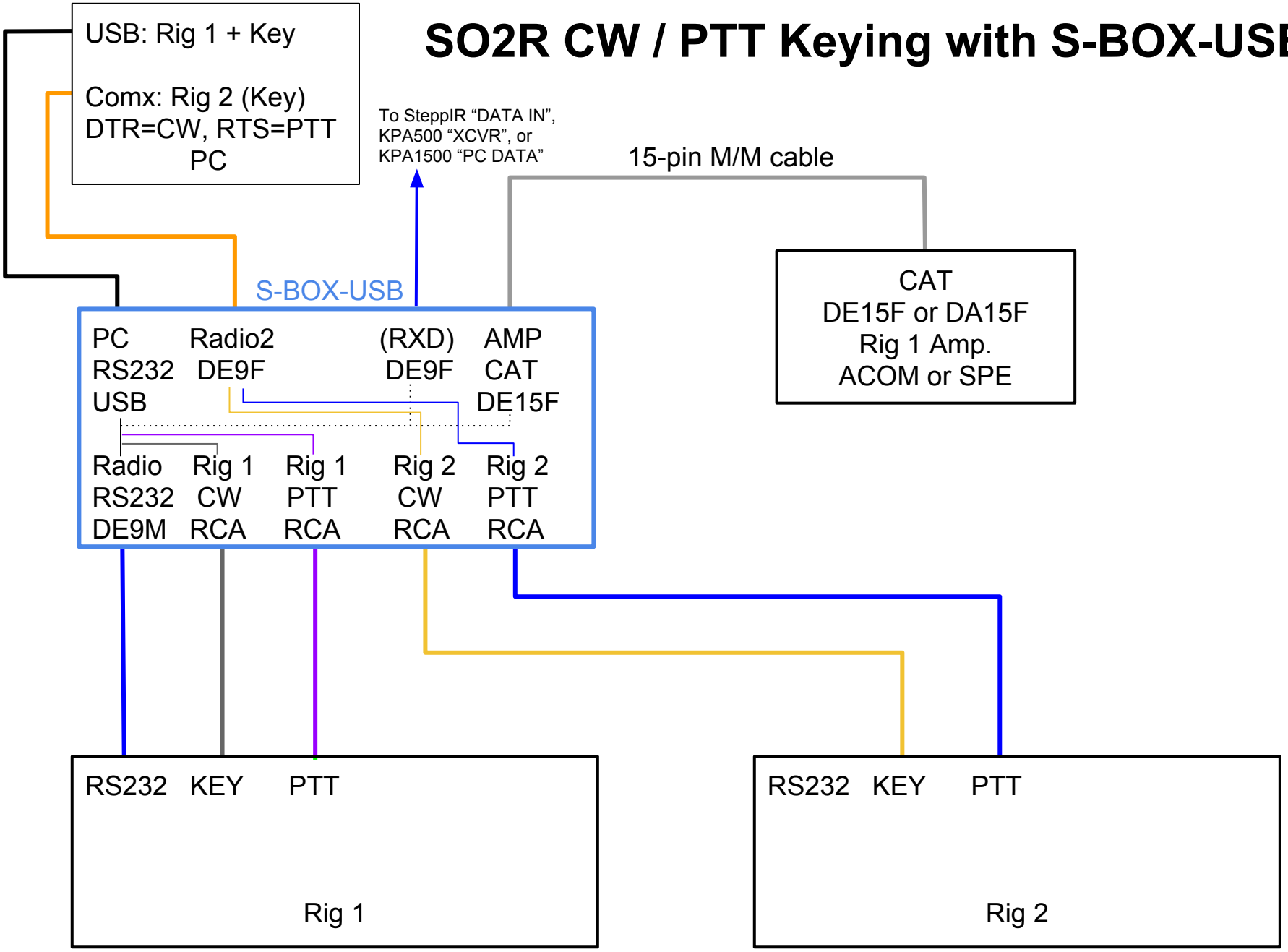SO2R CW / PTT Keying with S-BOX-USB