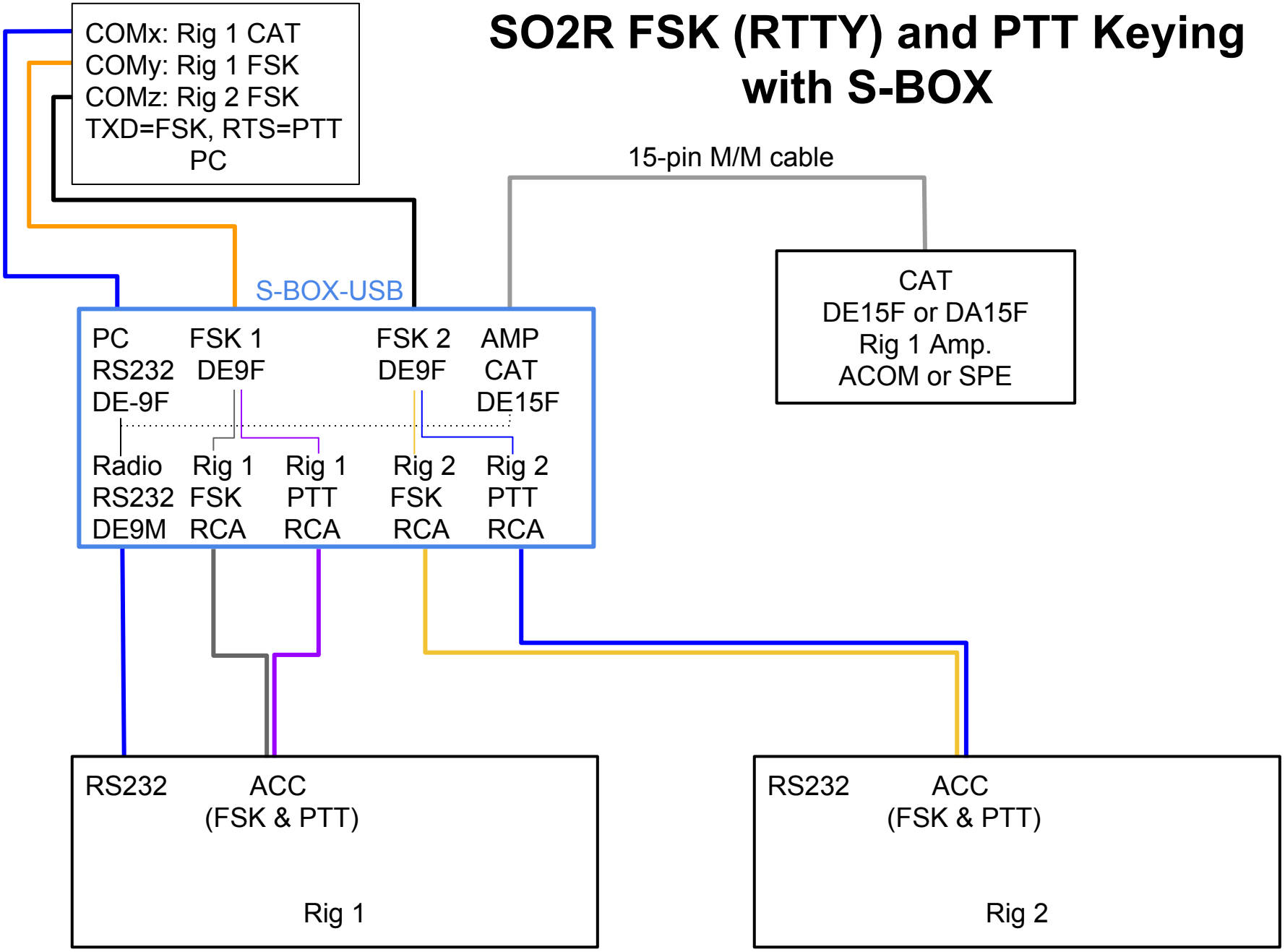SO2R FSK (RTTY) and PTT Keying with S-BOX