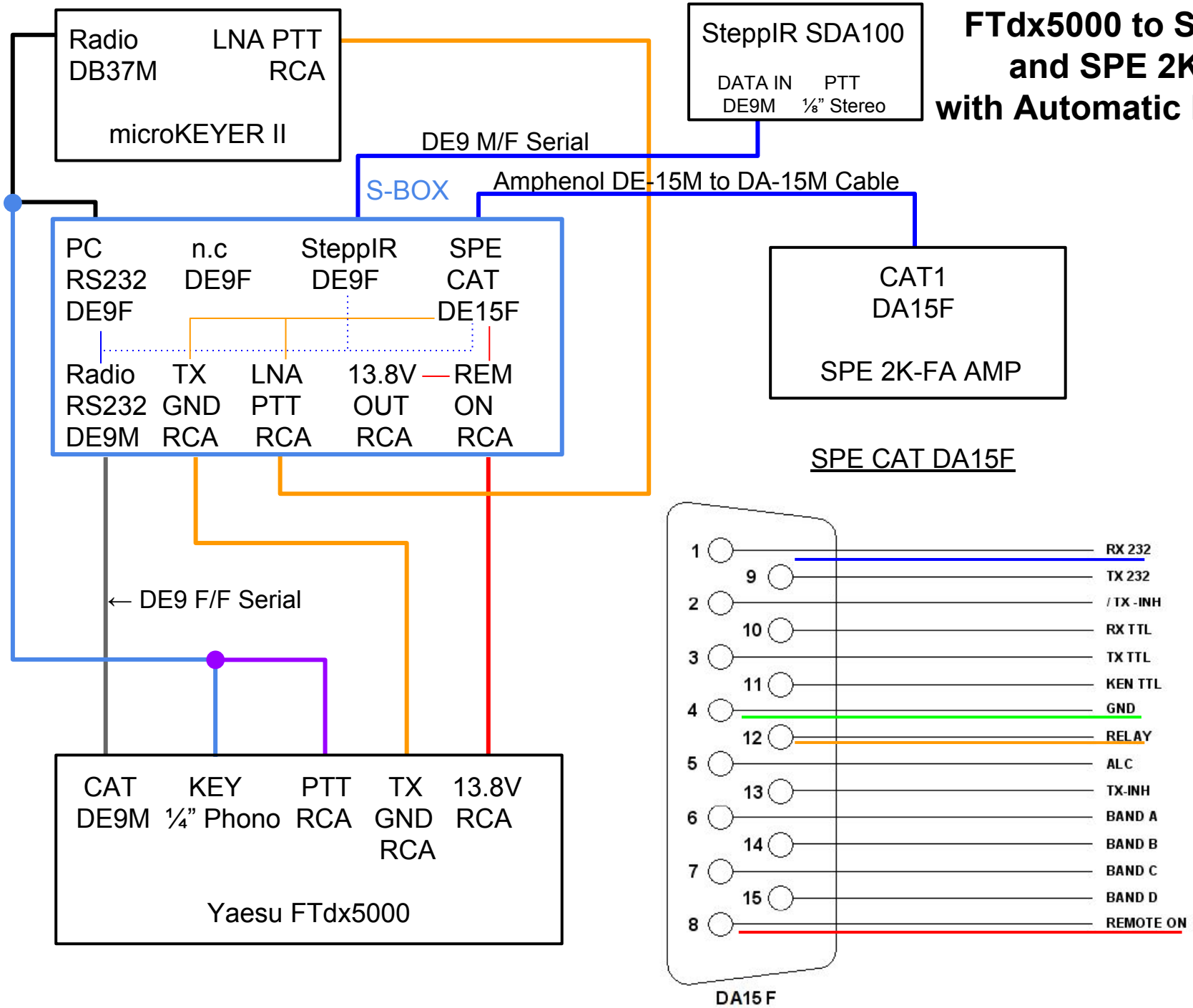FTdx5000 to SteppIR and SPE 2K-FA with Automatic PWR ON